PRISM

User Manual

InWin ATX PC Case

STUNNING MID TOWER CASE

Product Video Information

PRISM Product Video

PRISM Installation Guide Video

Our adventure begins

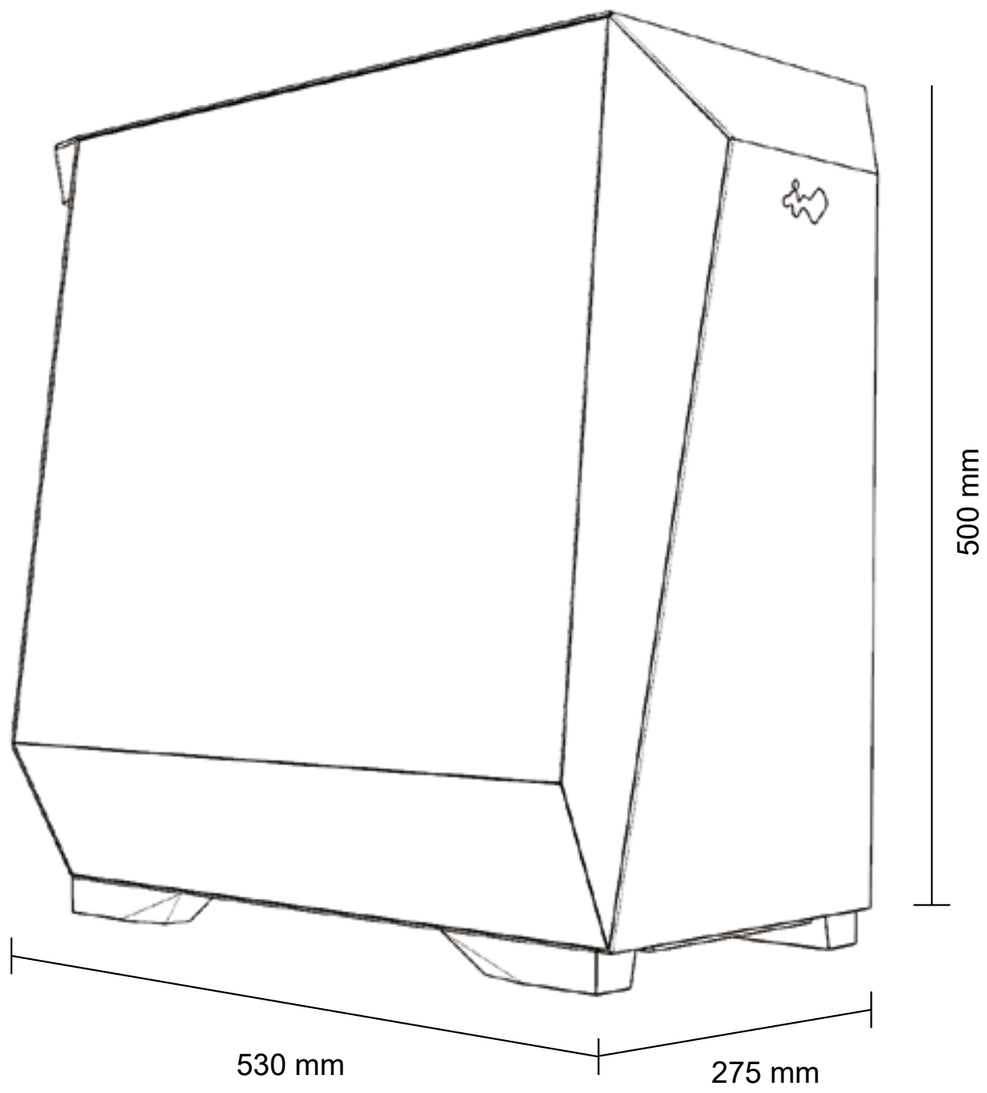

Specifications

Model	PRISM
Model Number	IW-CS-PRISMBLK-4VX120, IW-CS-PRISMWHI-4VX120P
Color	Black, White
Case Type	Mid Tower
Materials	SPCC, Tempered Glass
M/B Compatibility	ATX, Micro-ATX, Mini-ITX
Expansion Slots	7 x PCI-E (Riser Cable Optional; Not Included in Package)
Maximum Compatibility	GPU Length: 435 mm CPU Heatsink Height: 175 mm
I/O Ports	1 x USB 3.2 Gen 2x2 Type-C 2 x USB 3.2 Gen 1 HD Audio Combo (CTIA – SPK/Mic) LED Lighting Control Switch
Internal Drive Bays	2 x 3.5" & 2 x 2.5" (2.5" SSD H 7 mm Max.)
Thermal Solution Compatibility	Air Cooling Fans: Front: 3 x 120 / 140 mm Top: 3 x 120 / 2 x 140 mm Rear: 1 x 120 mm Side: 3 x 120 mm (4 InWin VX120/VX120P Fans Included) Water Cooling Radiators: Front: 1 x 240 / 360 mm Top: 1 x 240 / 280 / 360 mm Rear: 1 x 120 mm Side: 1 x 240 / 360 mm
Power Supply Compatibility	PSII: ATX12V - Length up to 238 mm
Product Dimensions (L x W x H)	530 x 275 x 500 mm 20.9 x 10.8 x 19.7"
Package Dimension (L x W x H)	583 x 370 x 638 mm 22.9 x 14.5 x 25.1"
Net Weight	10.01 Kg / 22.2 lbs
Gross Weight	12.3 Kg / 27.1 lbs

* InWin's products comply with RoHS regulations.
* Specifications may vary based on different regions.

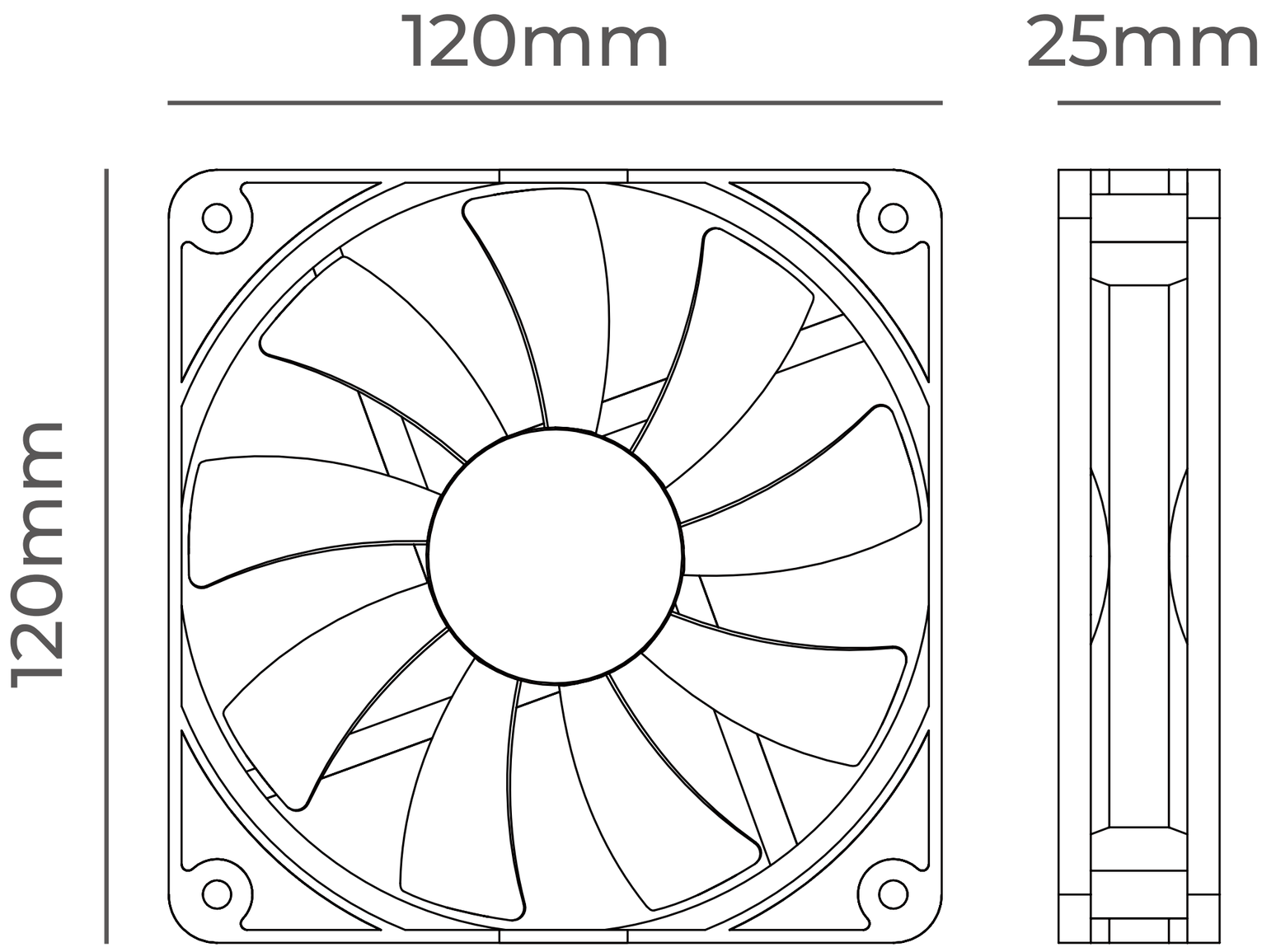

Specifications

Model	VORTEX
Quantity Included	Single Pack
Style	Regular Blade
Model Number	IW-FN-VX120-1PK, IW-FN-VX120P-1PK
Colors	Black, White
Fan Size	120 x 120 x 25 mm
Materials	PC, PBT
Rated Voltage	DC 12V
Rated Power	2.76W
Rated Current	0.23A
ARGB Rated Voltage	DC 5V
ARGB Rated Power	1.45W
ARGB Rated Current	0.29A
Speed Mode	PWM 600 - 1600 RPM
Air Flow	66.37 CFM
Air Pressure	1.4 mm/ H2O
LED	Addressable RGB
Connector to M/B	4-Pin (12V, PWM), 3-Pin (5V, ARGB)
Noise Level	31.7 dB(A)
Bearing Type	Hydro Bearing

* InWin's products comply with RoHS regulations.
* Specifications may vary based on different regions.

Accessories Bag

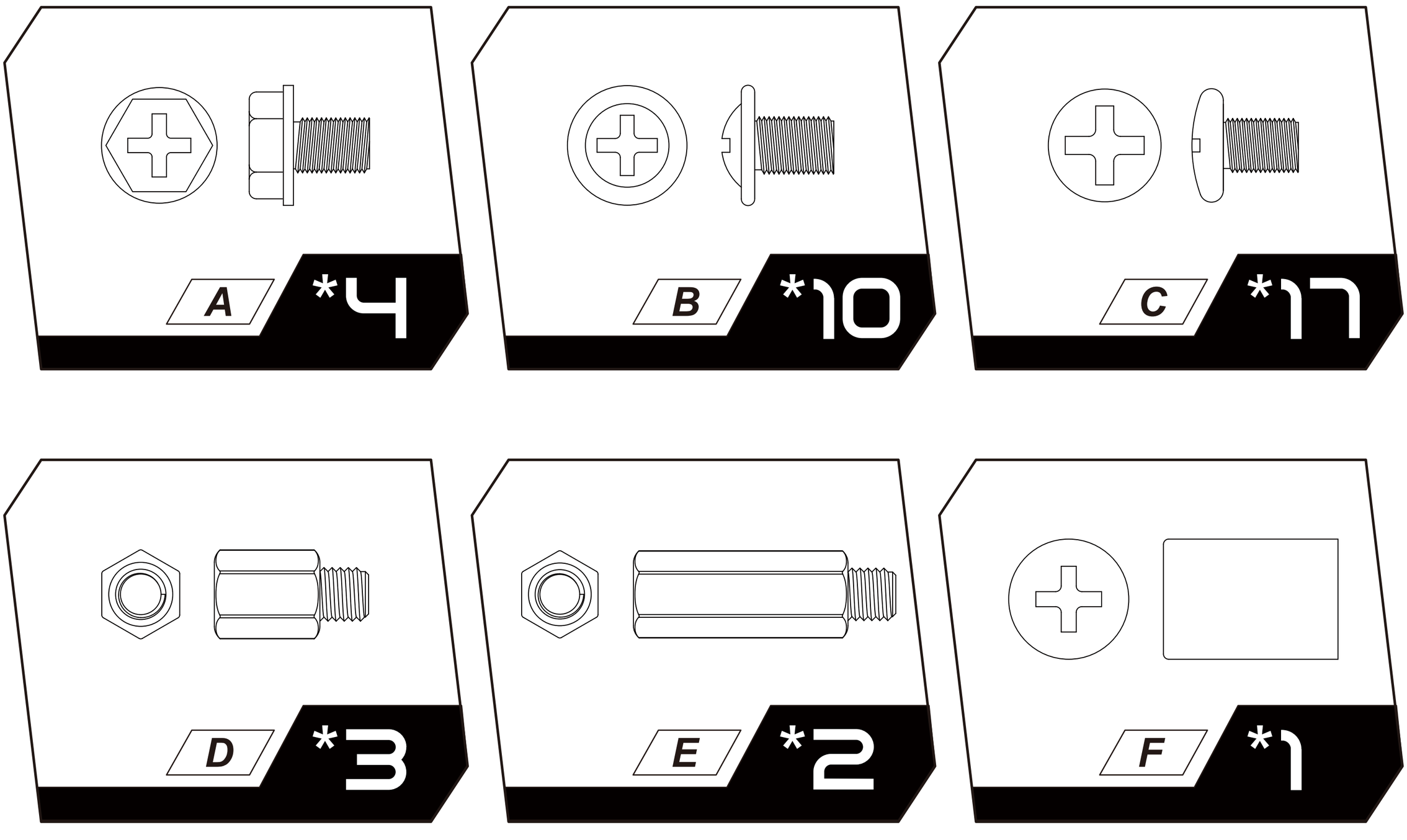

A	PSU Screws
B	PCI-E Riser Cable Screws / 2.5" SSD Screws
C	Motherboard Screws / 3.5" HDD Screws
D	Motherboard Stand-Offs
E	PCI-E Riser Cable Stand-Offs
F	Motherborad Stand-Off Socket
G	Cable Ties
H	Plastic Buckle
I	Velcro Strips
J	QR Code Card
K	One to Four Adapter PWM Cable
L	Front Fan Screws
M	Wiping Cloth

Case Structure

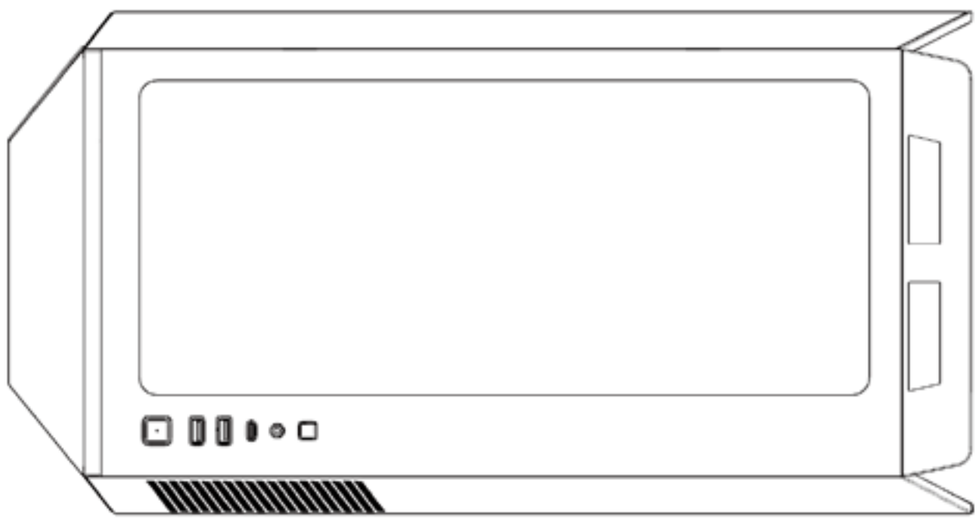

Top

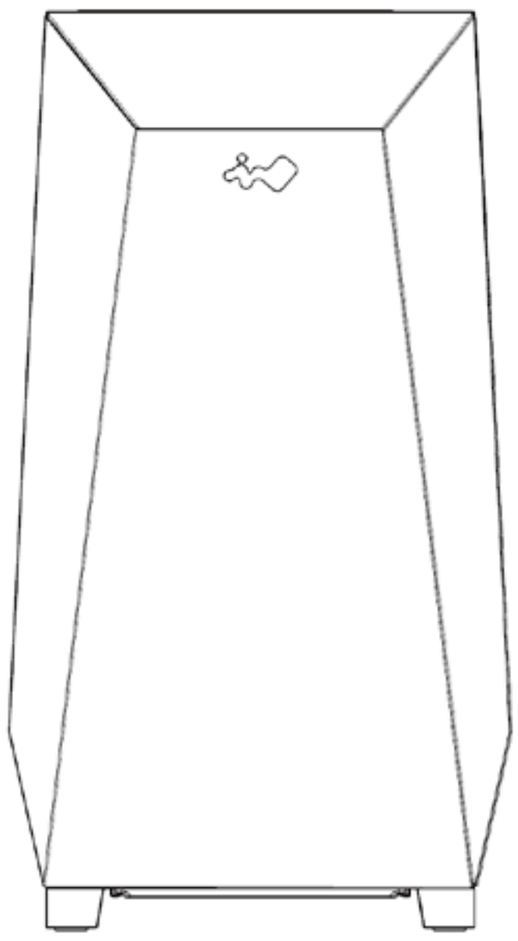

Front

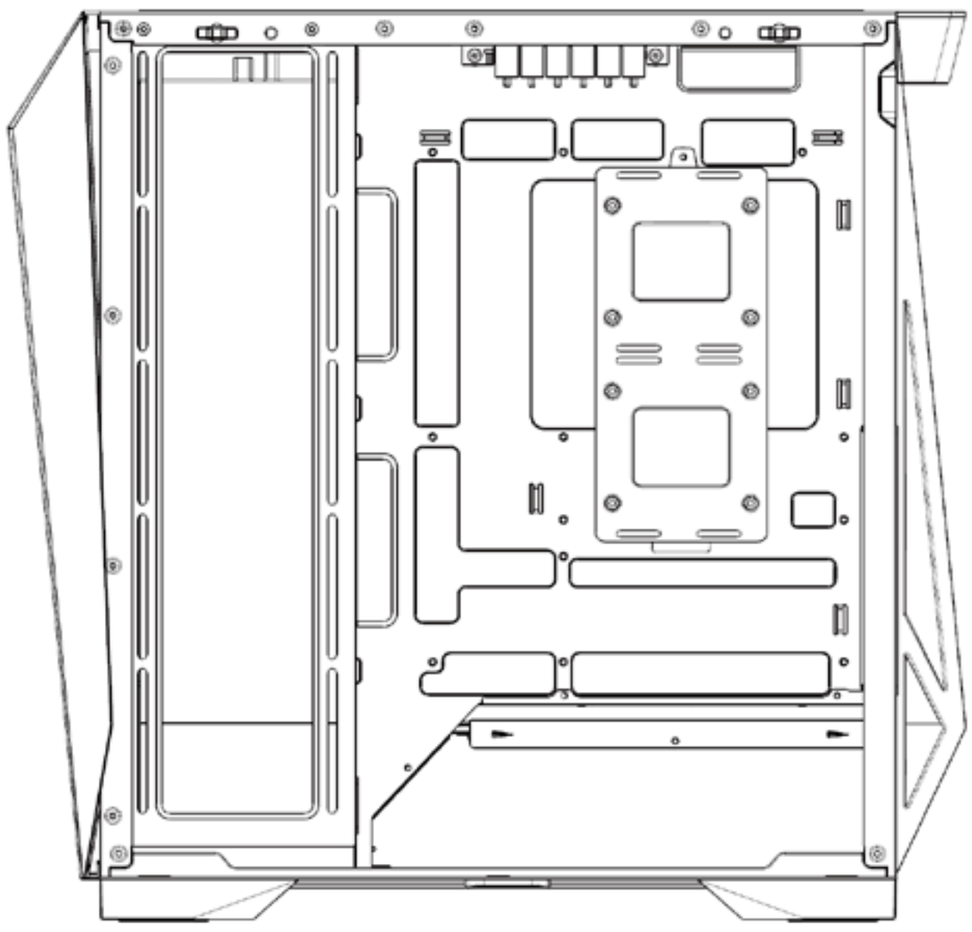

Right

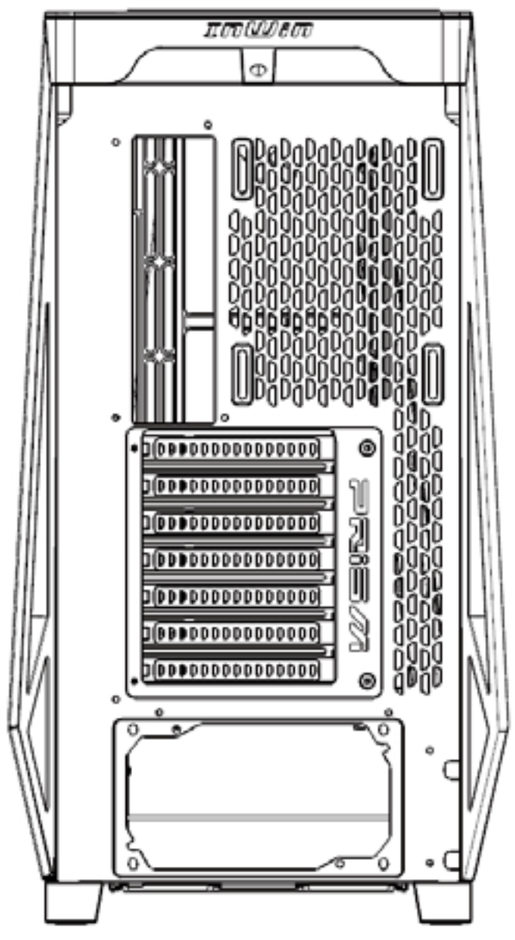

Rear

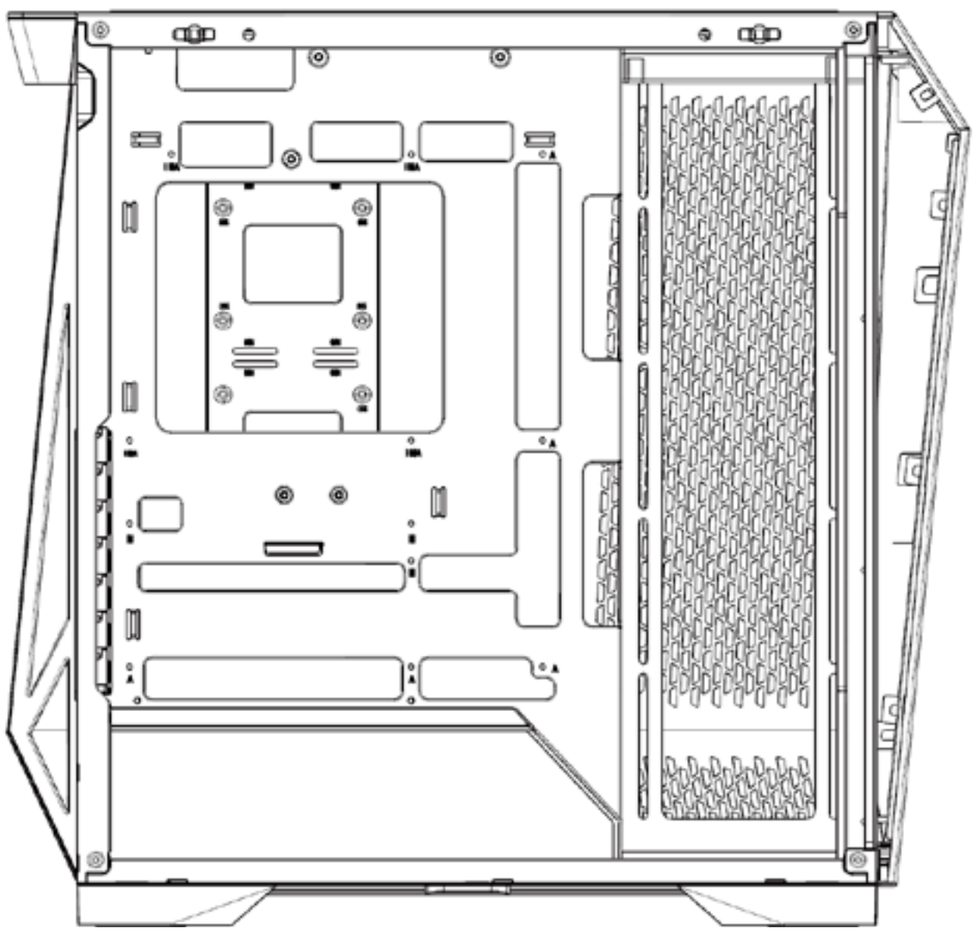

Left

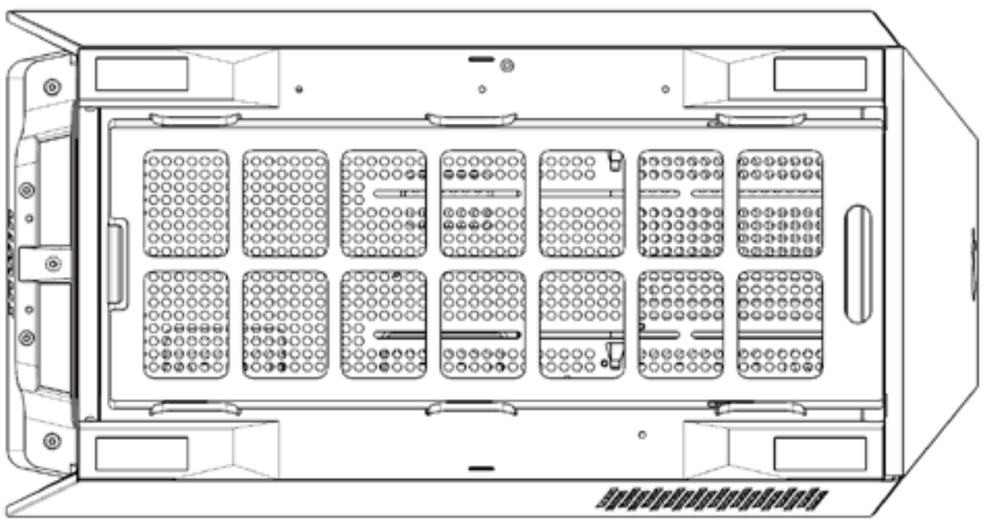

Bottom

Case Structure

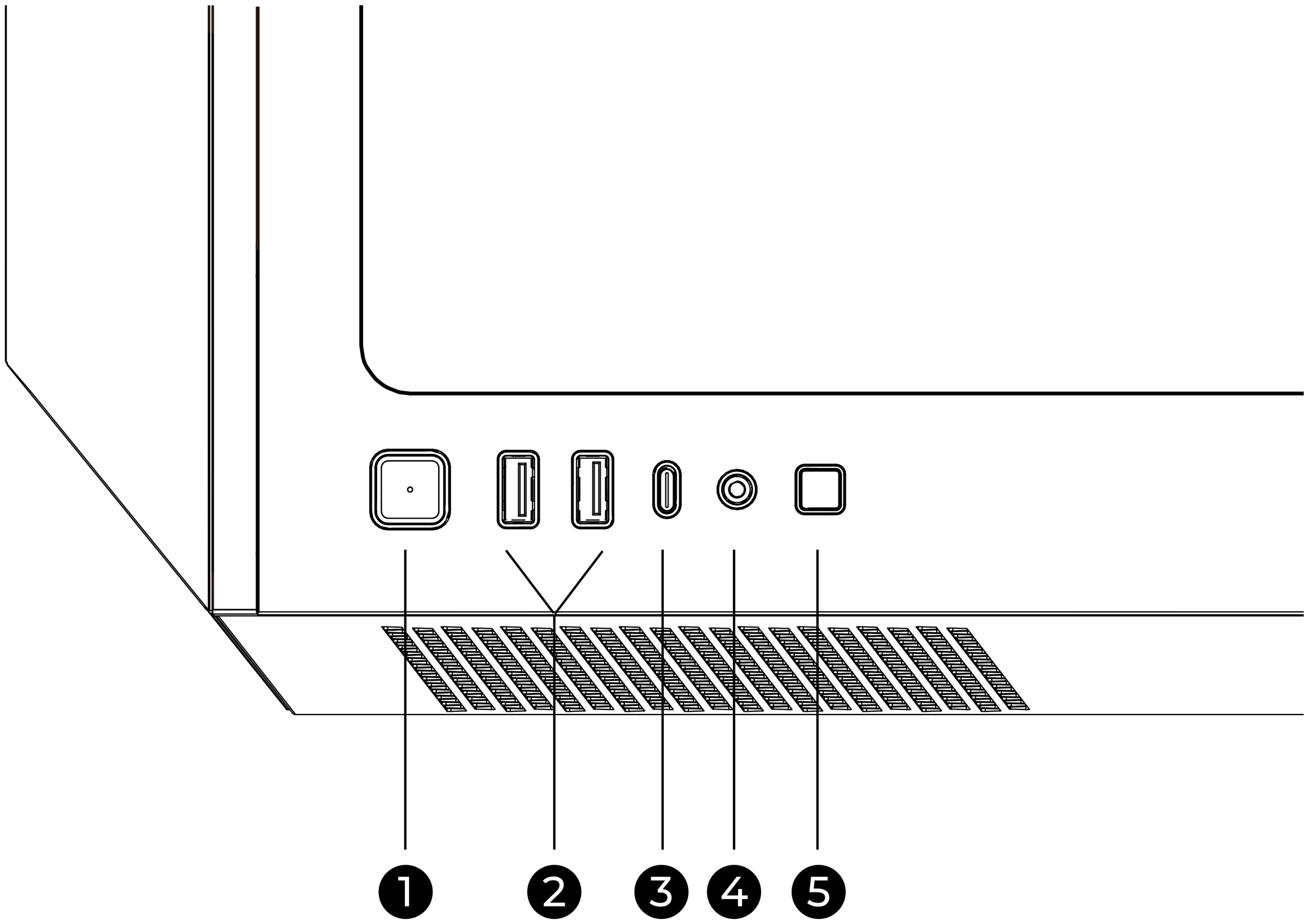

1	Power Button
2	USB 3.2 Gen 1
3	USB 3.2 Gen 2x2 Type-C
4	HD Audio Combo (CTIA – SPK/Mic)
5	LED Lighting Control Switch

Case Structure

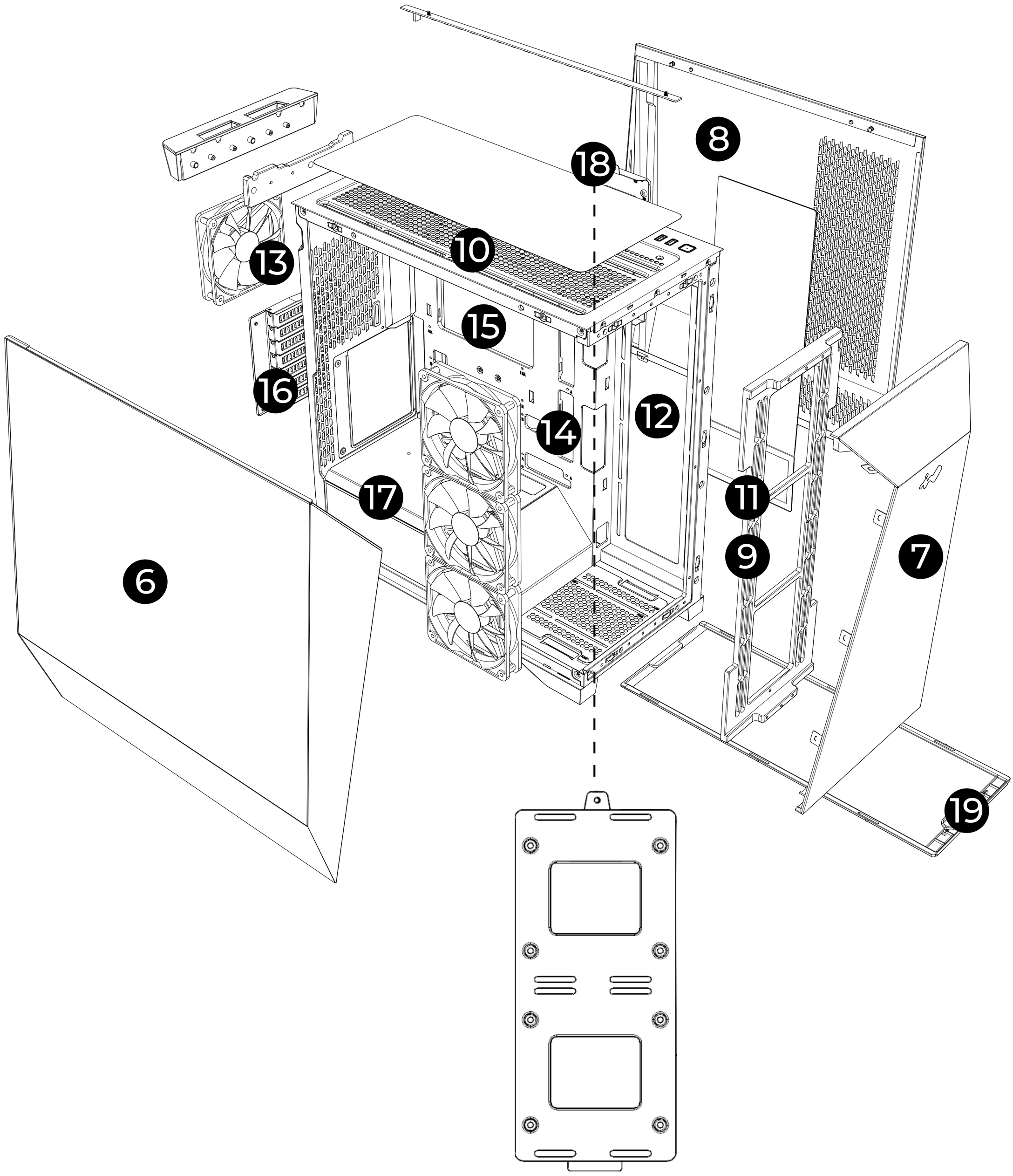

6	Tempered Glass Side Panel
7	Mesh Front Panel
8	SPCC Side Panel
9	Transparent Fan Bracket
10	Top Fans / Radiator Mounting Area
11	Front Fans / Radiator Mounting Area
12	Side Fans / Radiator Mounting Area (3 InWin VX120 Fans Pre-Installed)

13	Rear Fans / Radiator Mounting Area (1 InWin VX120 Fan Pre-Installed)
14	Motherboard Mounting Area
15	CPU Cooler Installation Cut-Out Hole
16	Rotatable PCI-E Slot Bracket
17	Power Supply Mounting Area
18	2.5" / 3.5" Drive Bays
19	Anti-Dust Filters

Installation Guide

1. Opening the Chassis

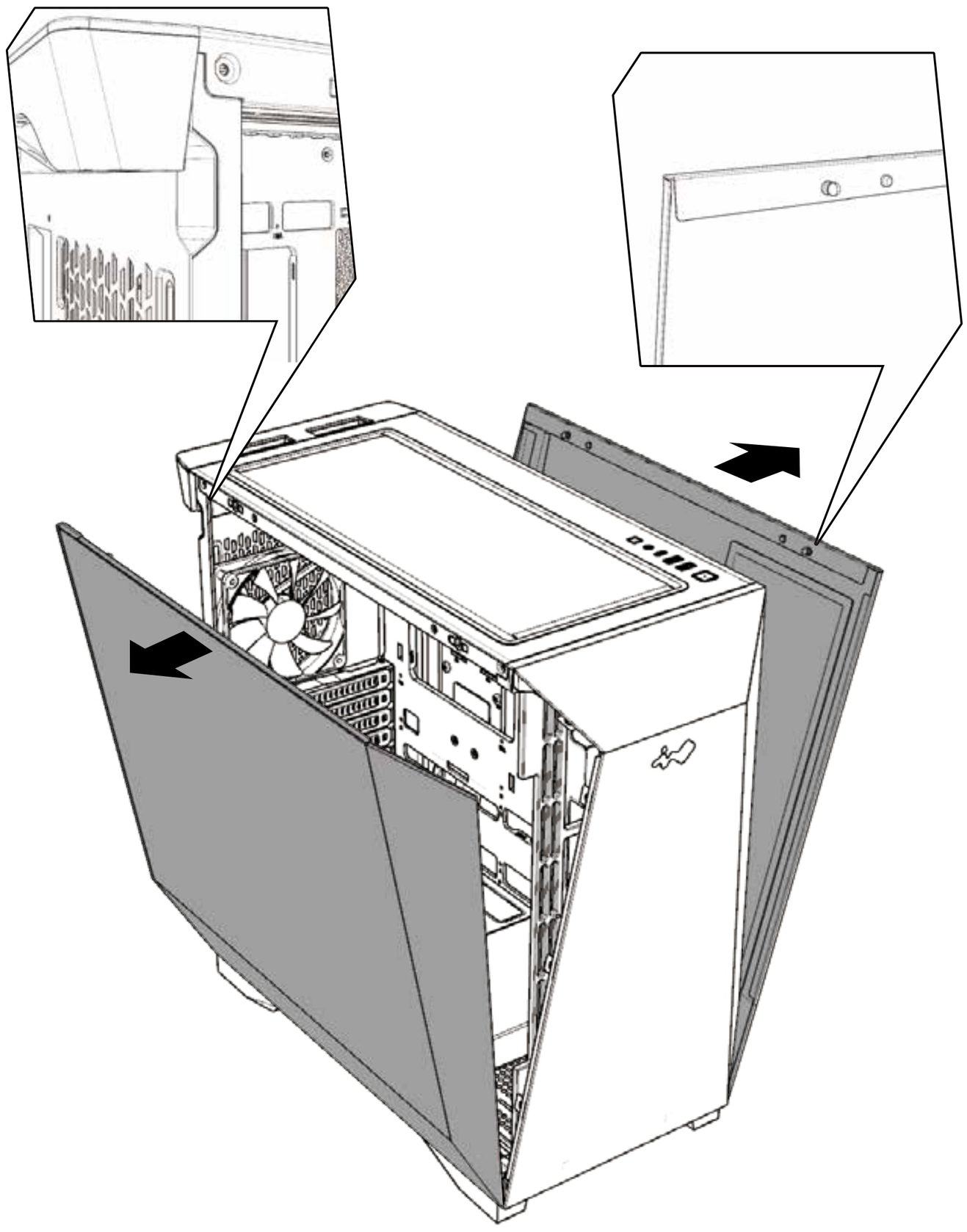

2. Remove Front Panel

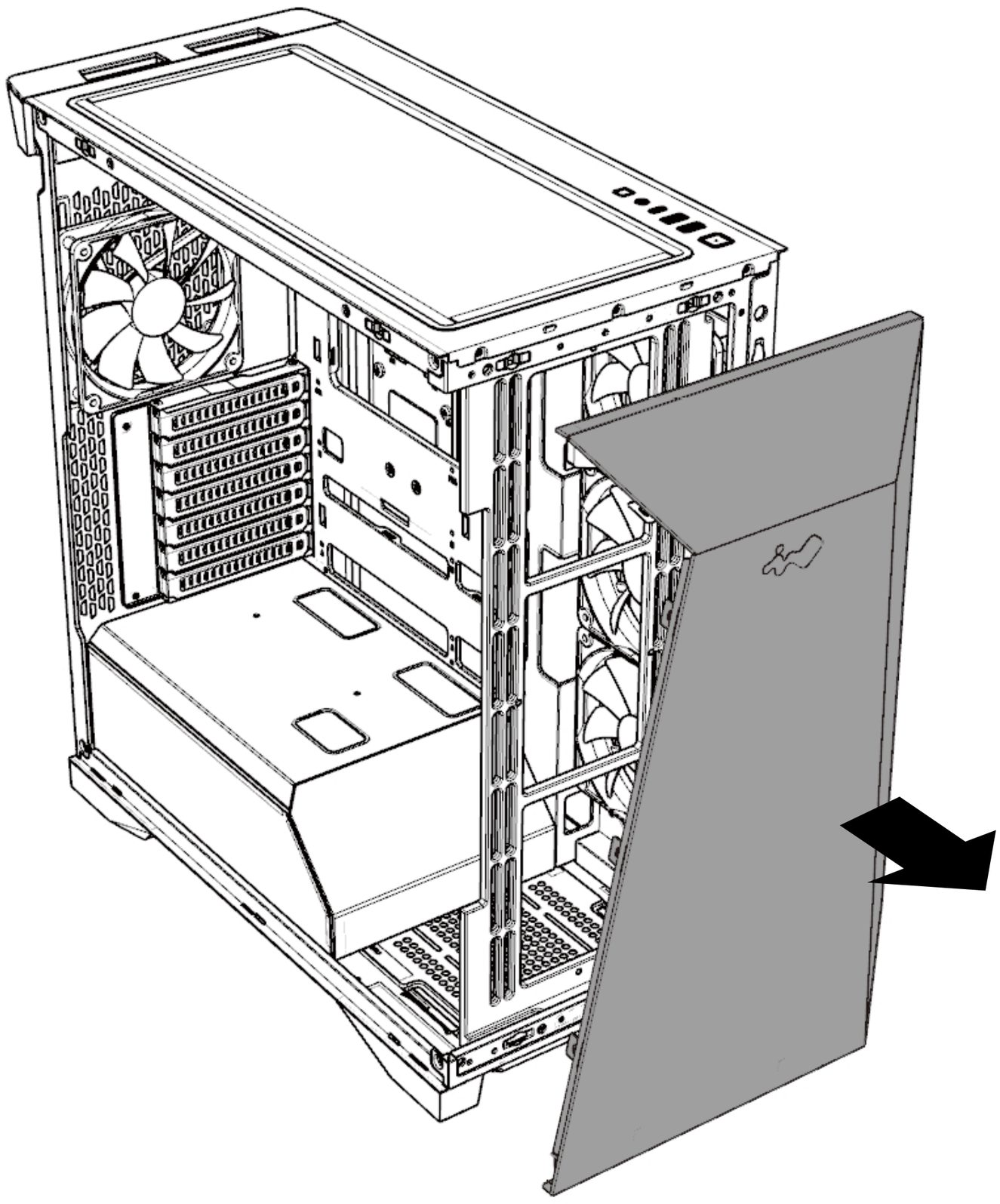

Installation Guide

3. Motherboard Installation

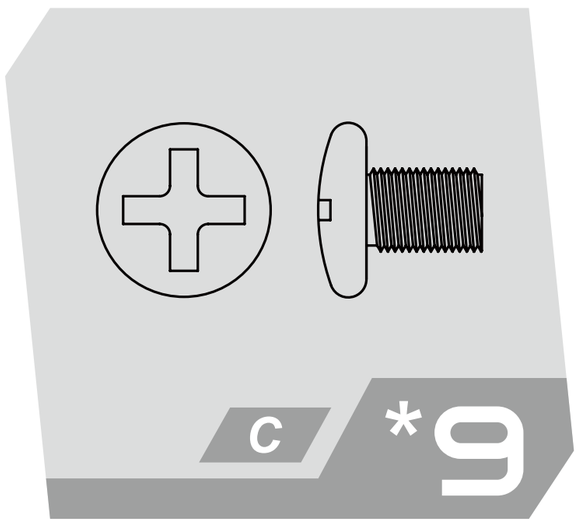

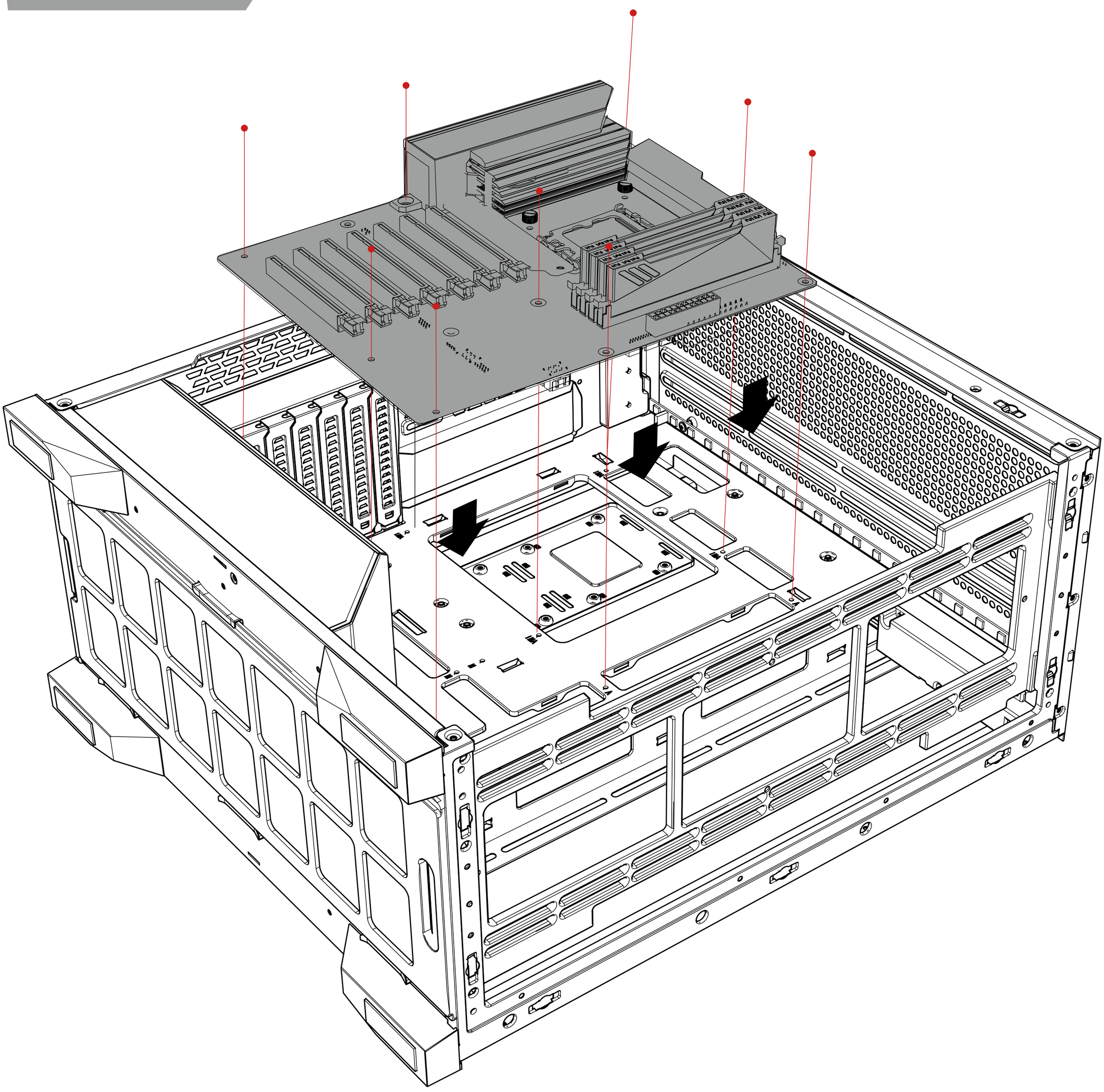

Installation Guide

4. Expansion Card Installation

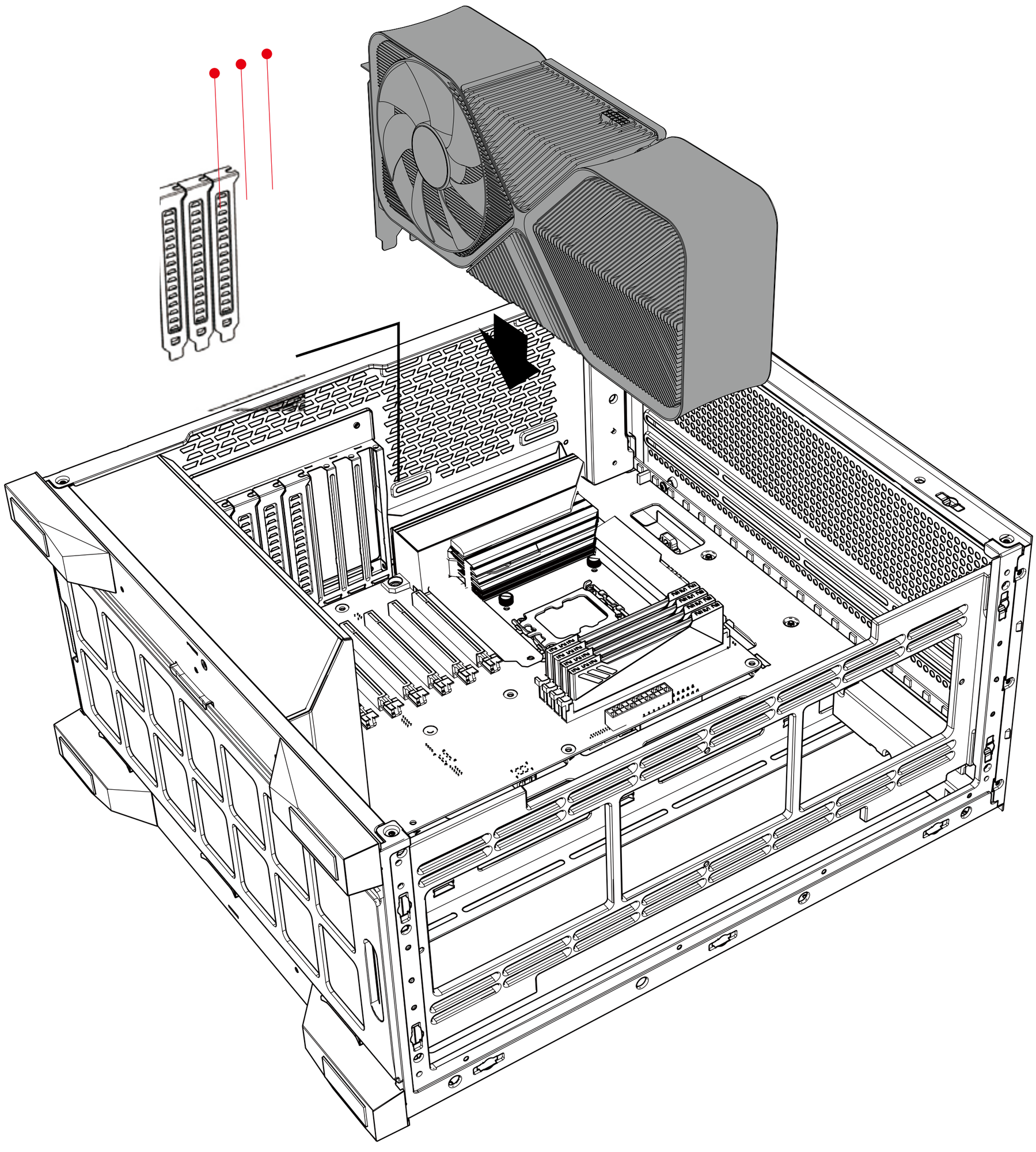

5. Expansion Card Installation

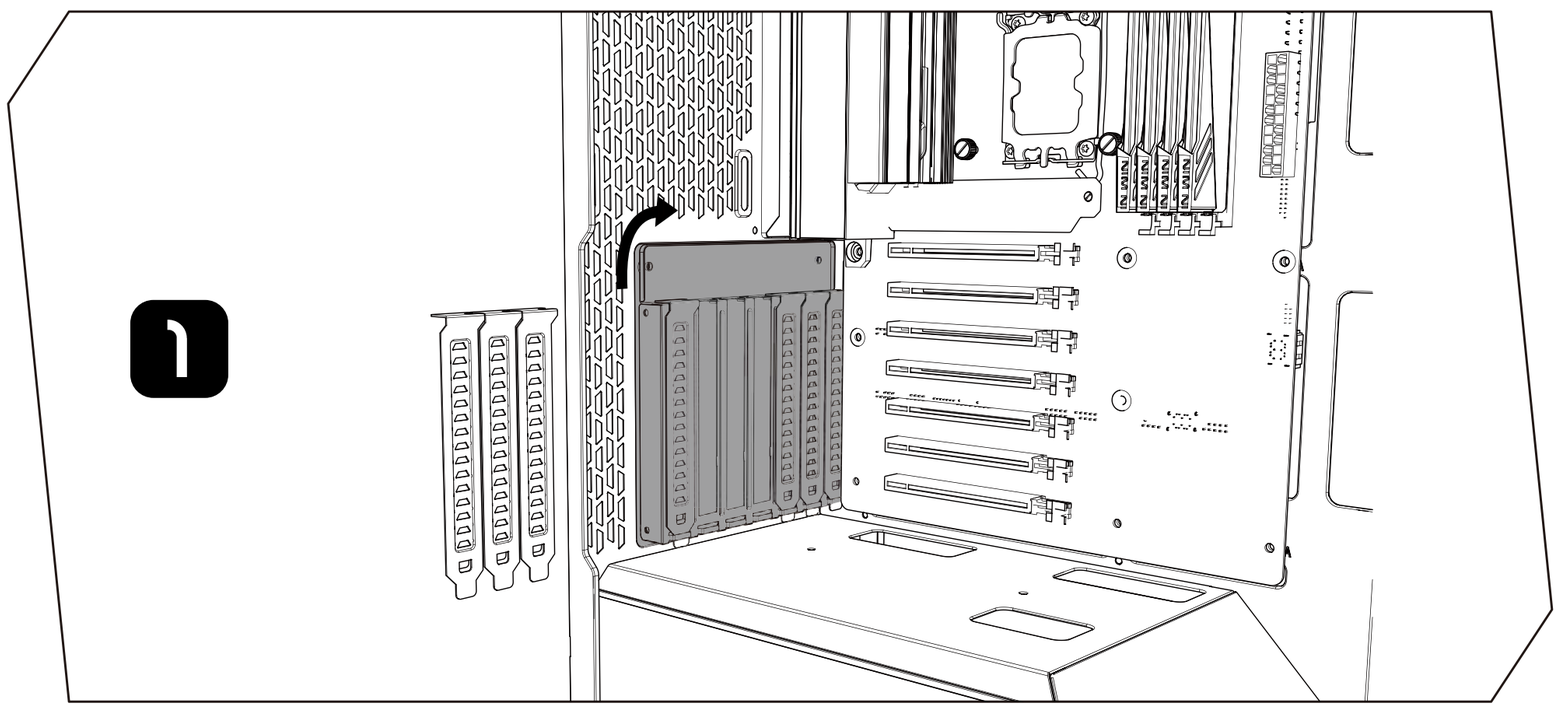

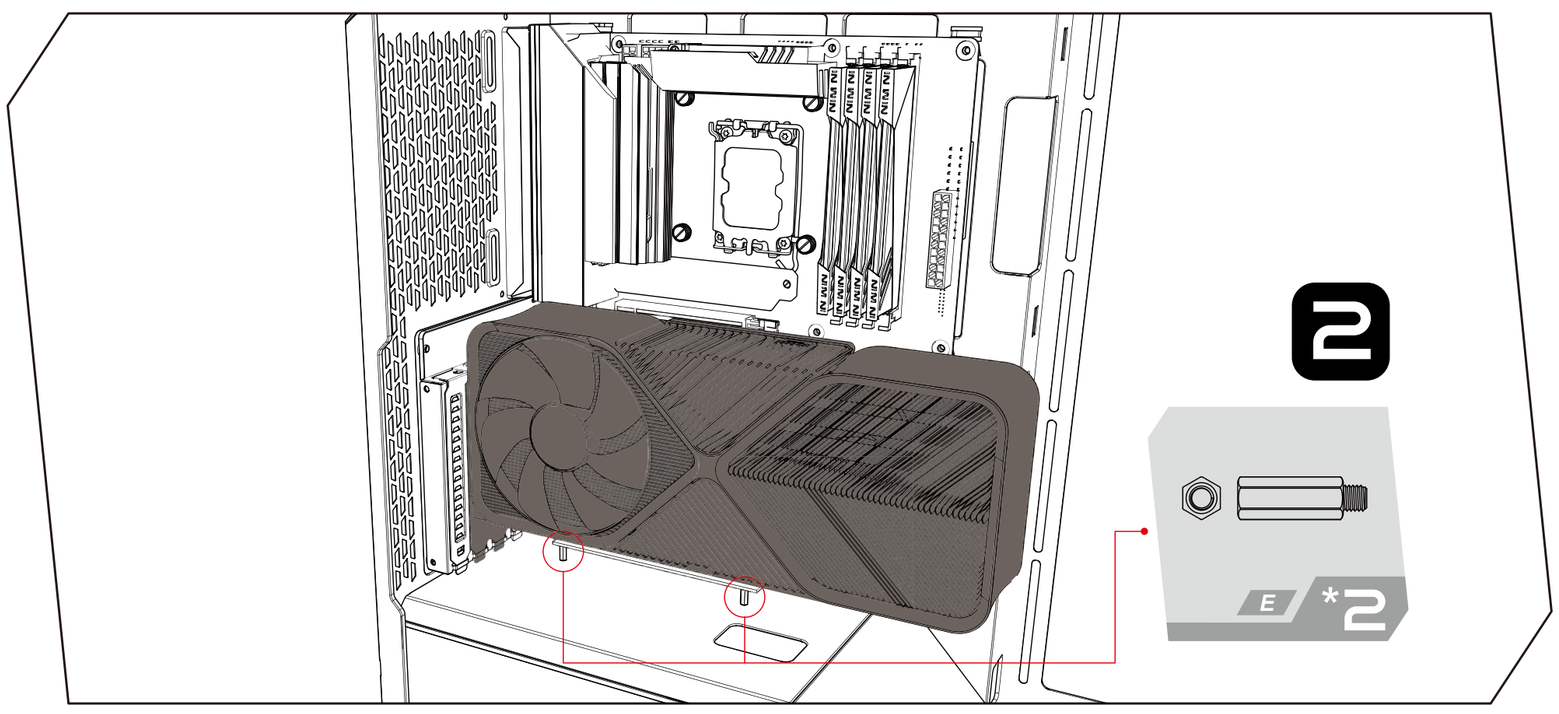

Installation Guide

6. Power Supply Installation

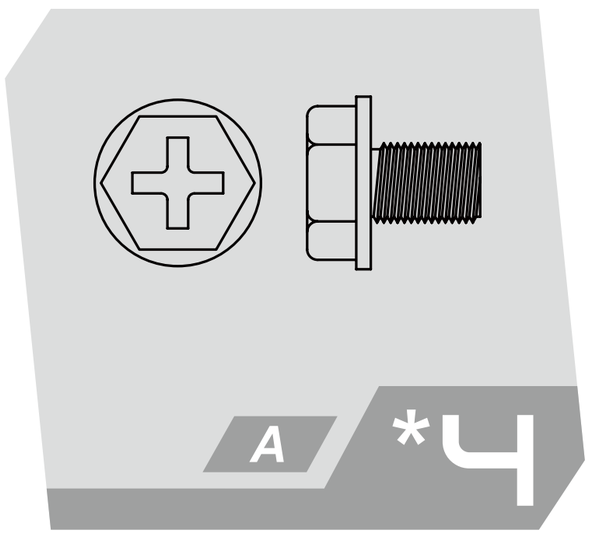

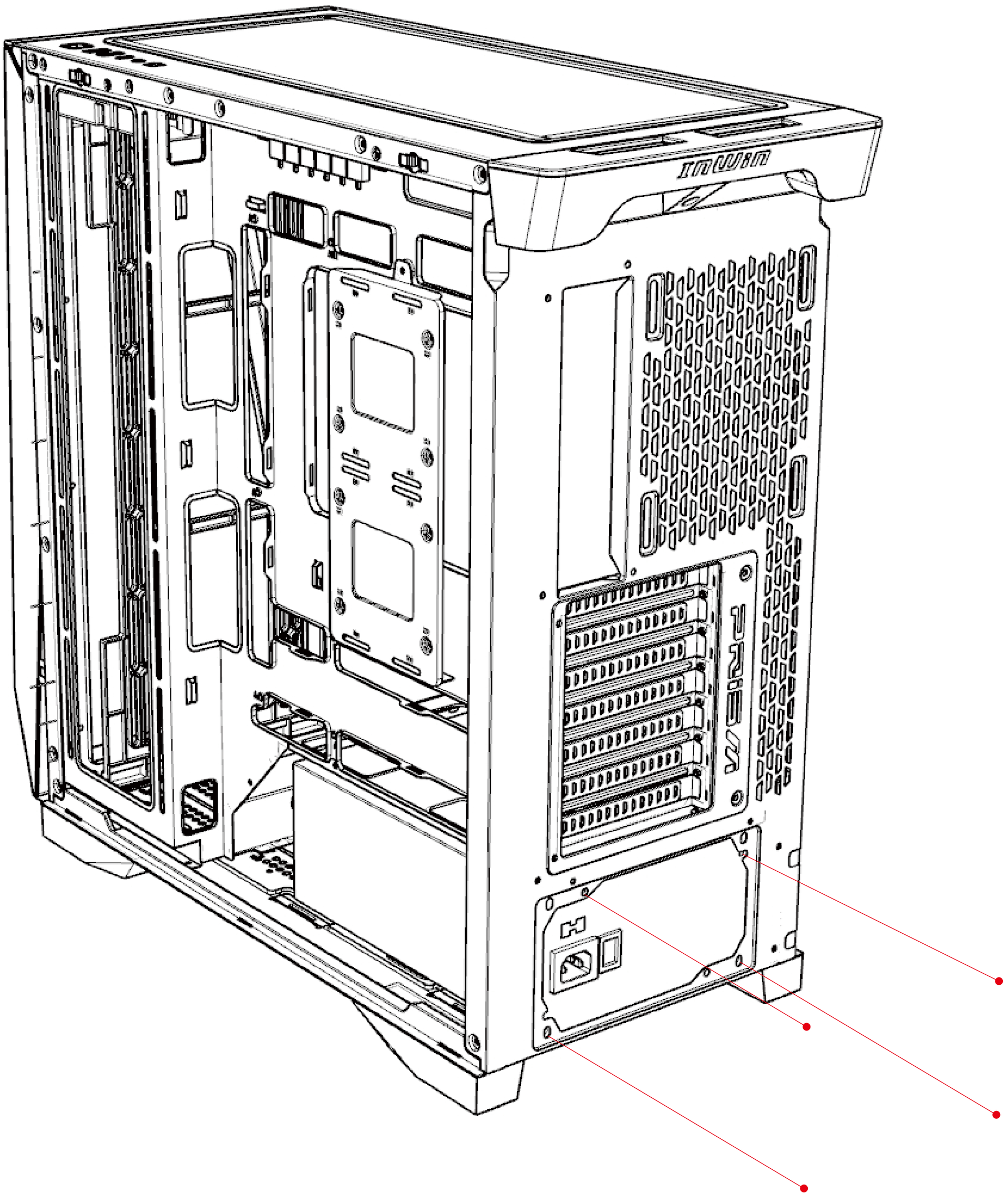

Installation Guide

7. 2.5" Drive Bays Installation

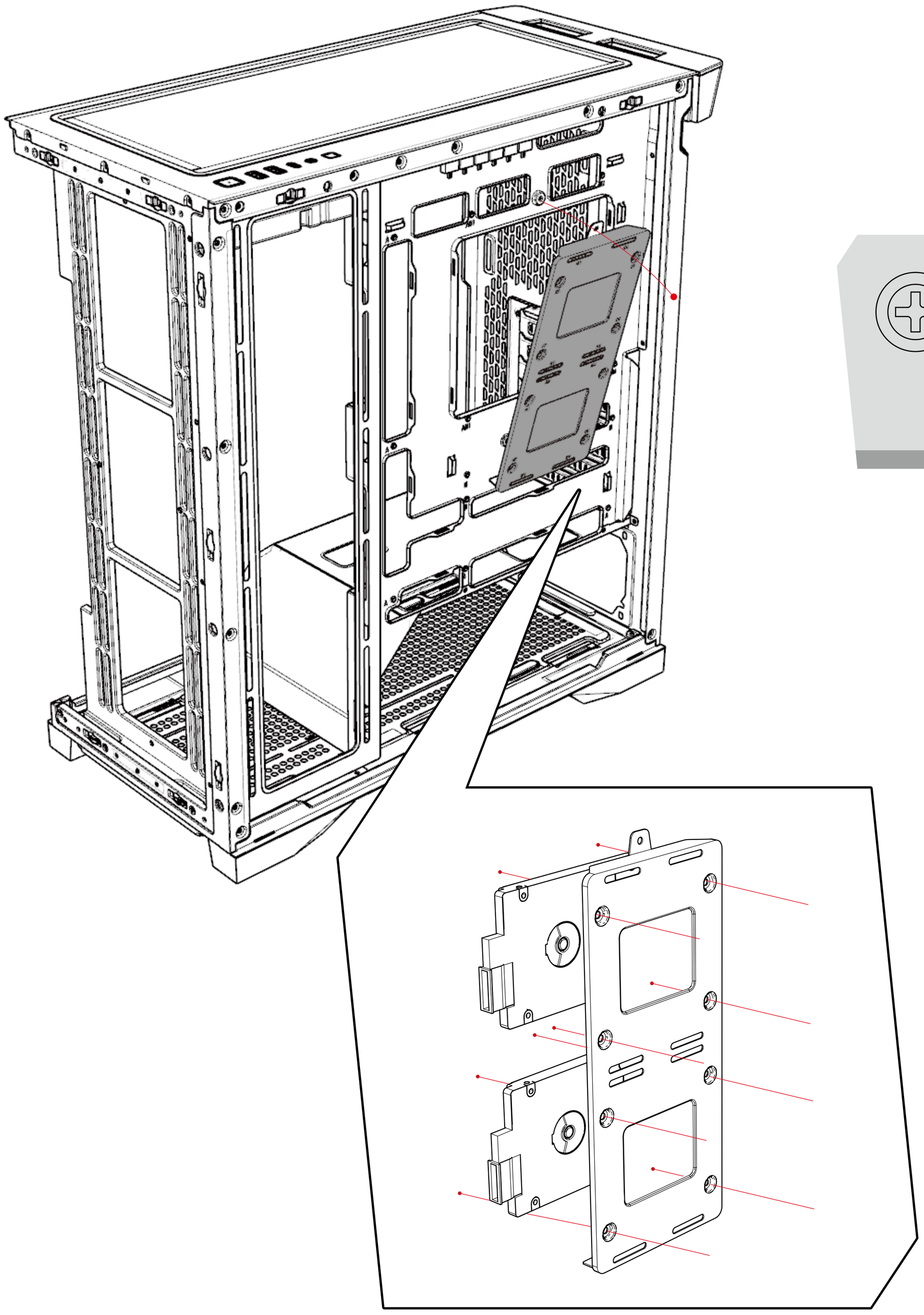

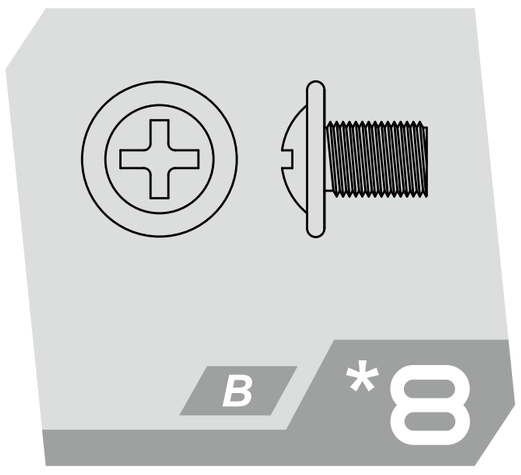

* Top SSD: Max. Height 9.5 mm
* Bottom SSD: Max. Height 7 mm

Installation Guide

8. 3.5" Drive Bays Installation

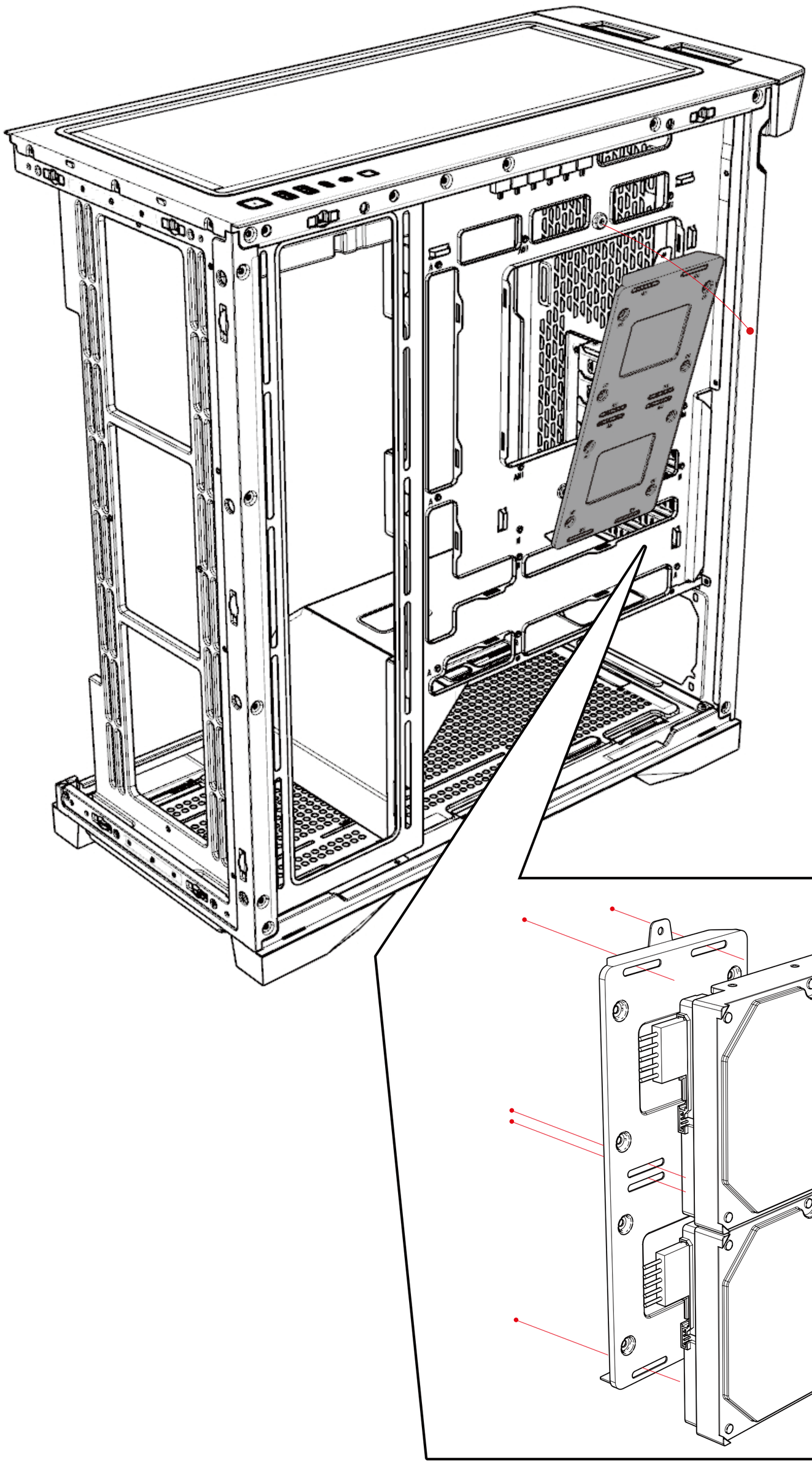

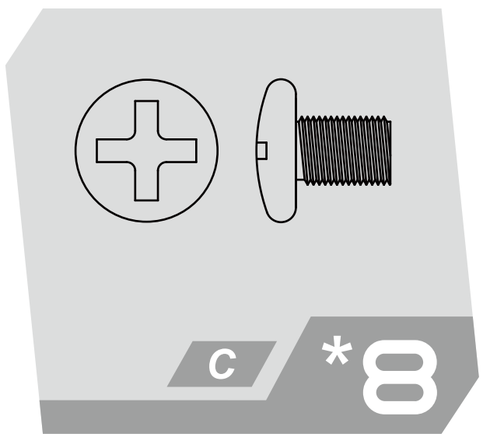

Installation Guide

9. Fan / Radiator Installation

Side

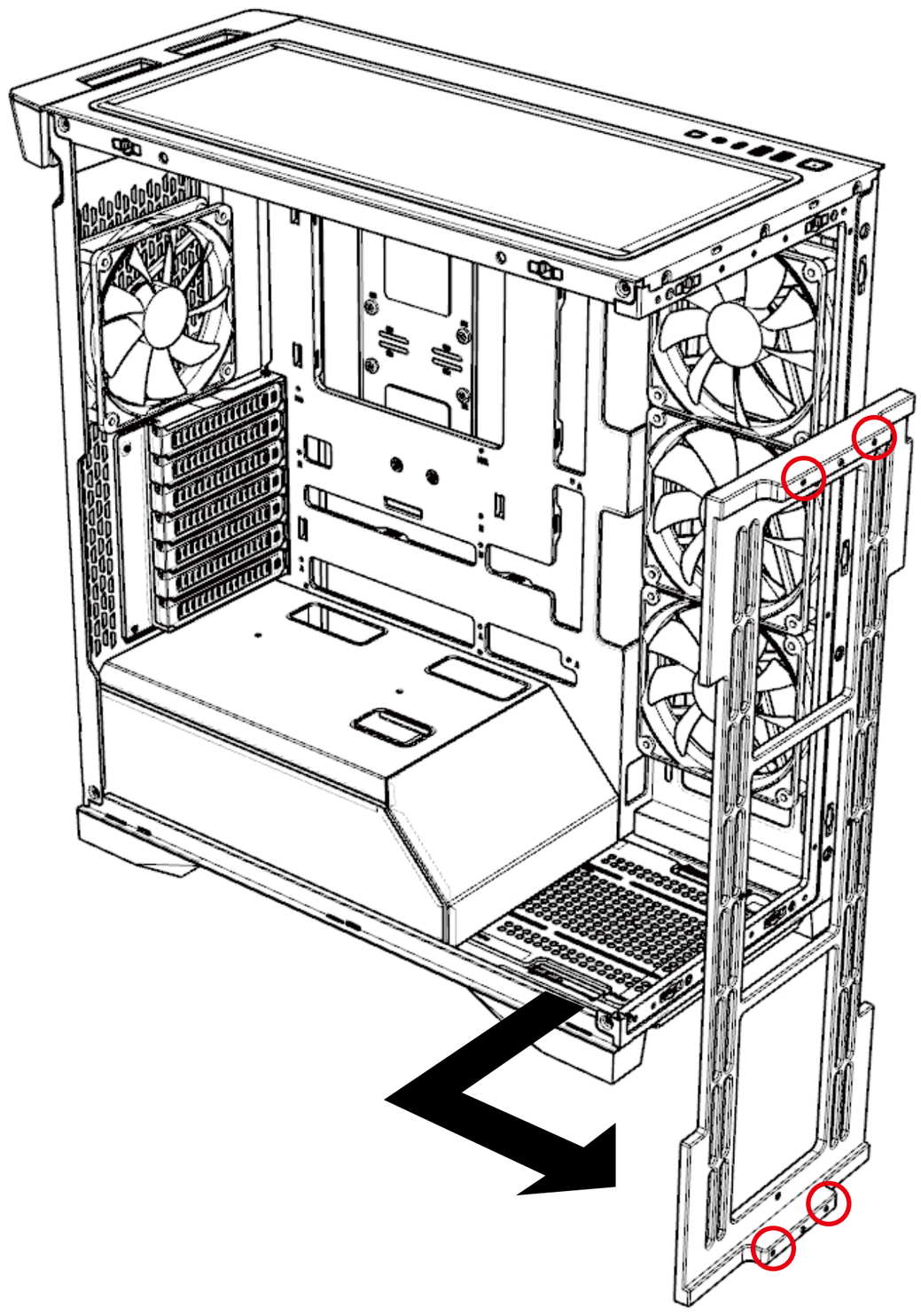

Remove the transparent fan bracket

*Suggestion: Please use manual, hand-turn screwdriver to remove the transparent fan bracket

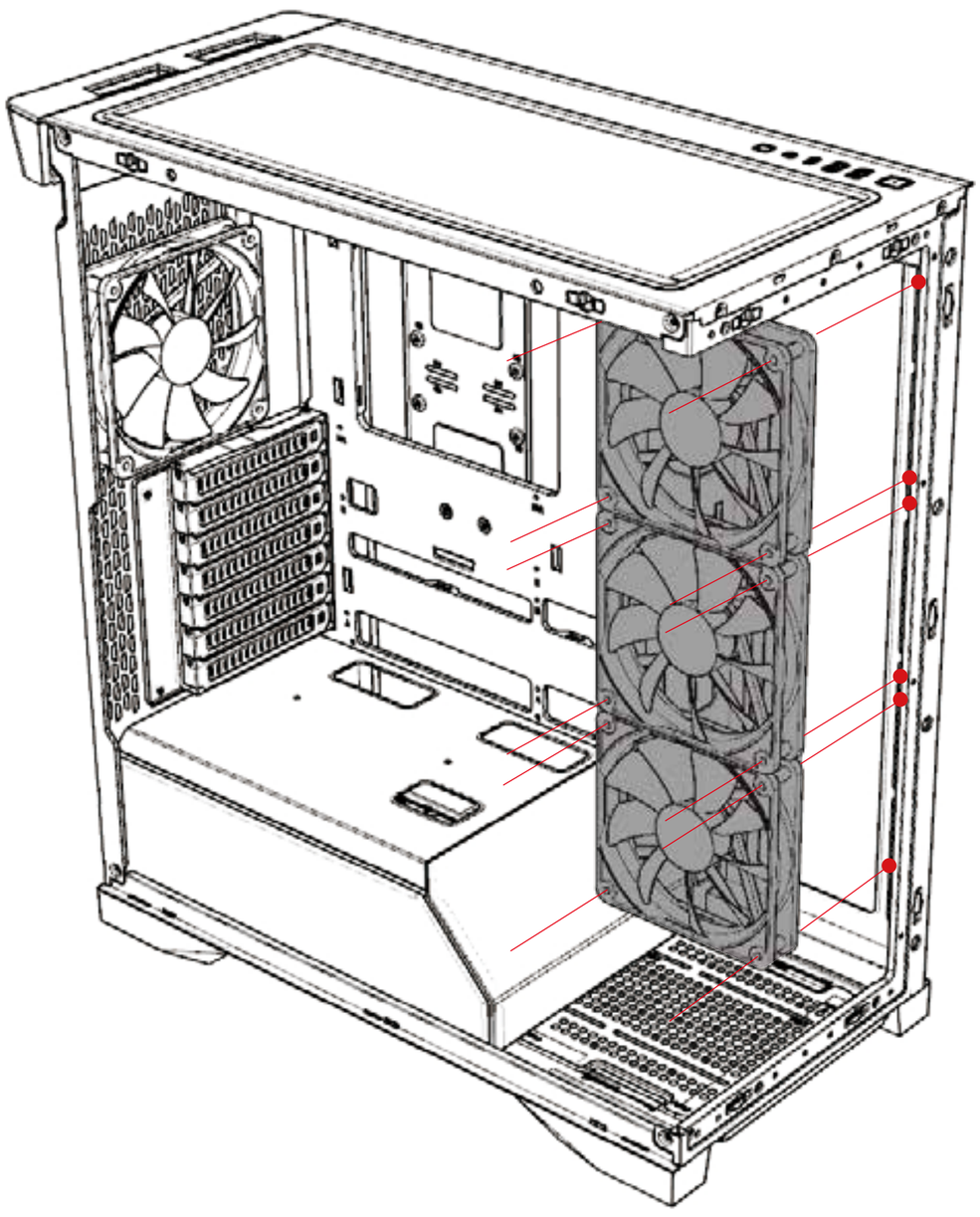

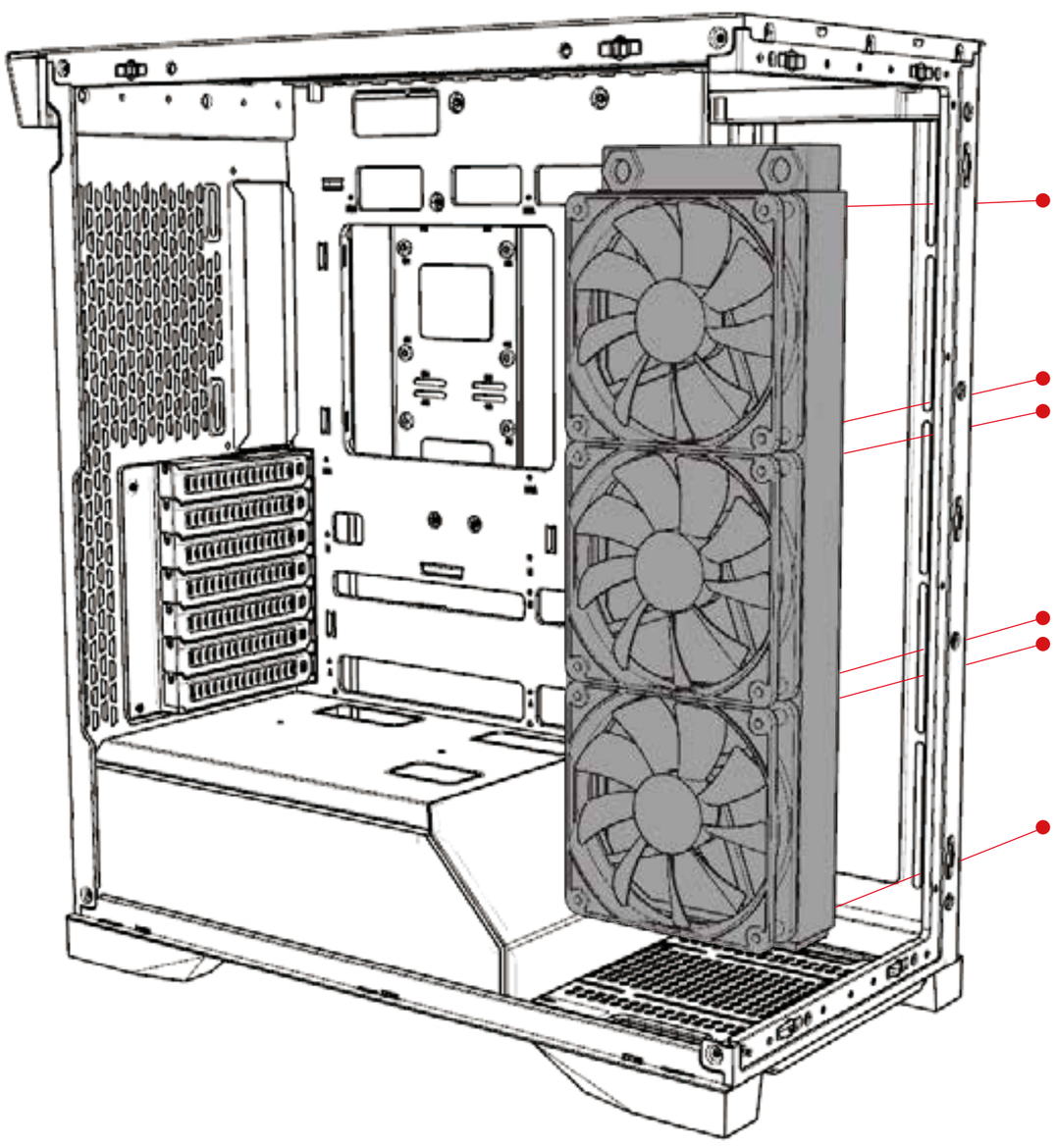

Installation Guide

9. Fan / Radiator Installation

Front

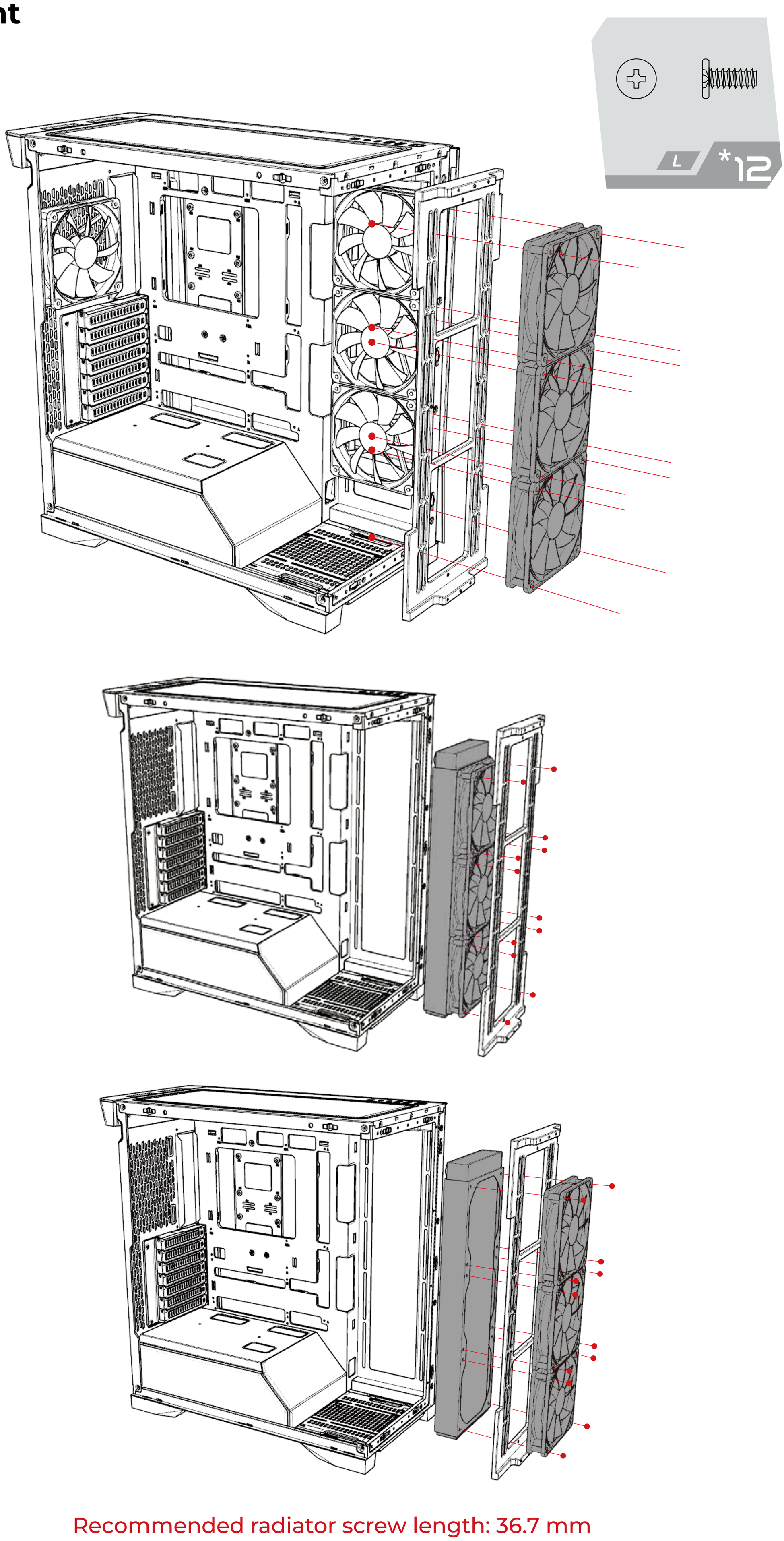

Recommended radiator screw length: 36.7 mm

Installation Guide

9. Fan / Radiator Installation

Top

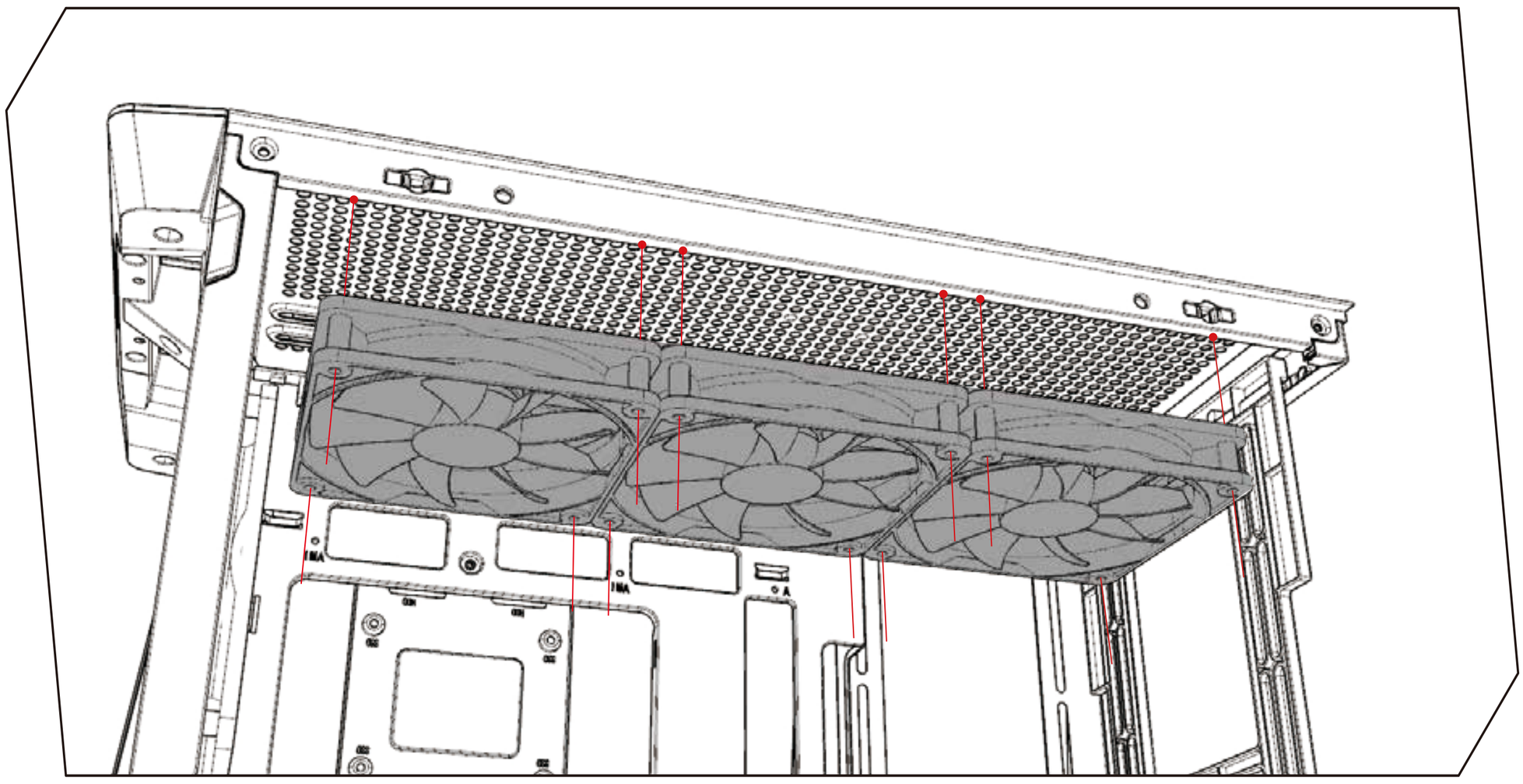

Installation Guide

9. Fan / Radiator Installation

Rear

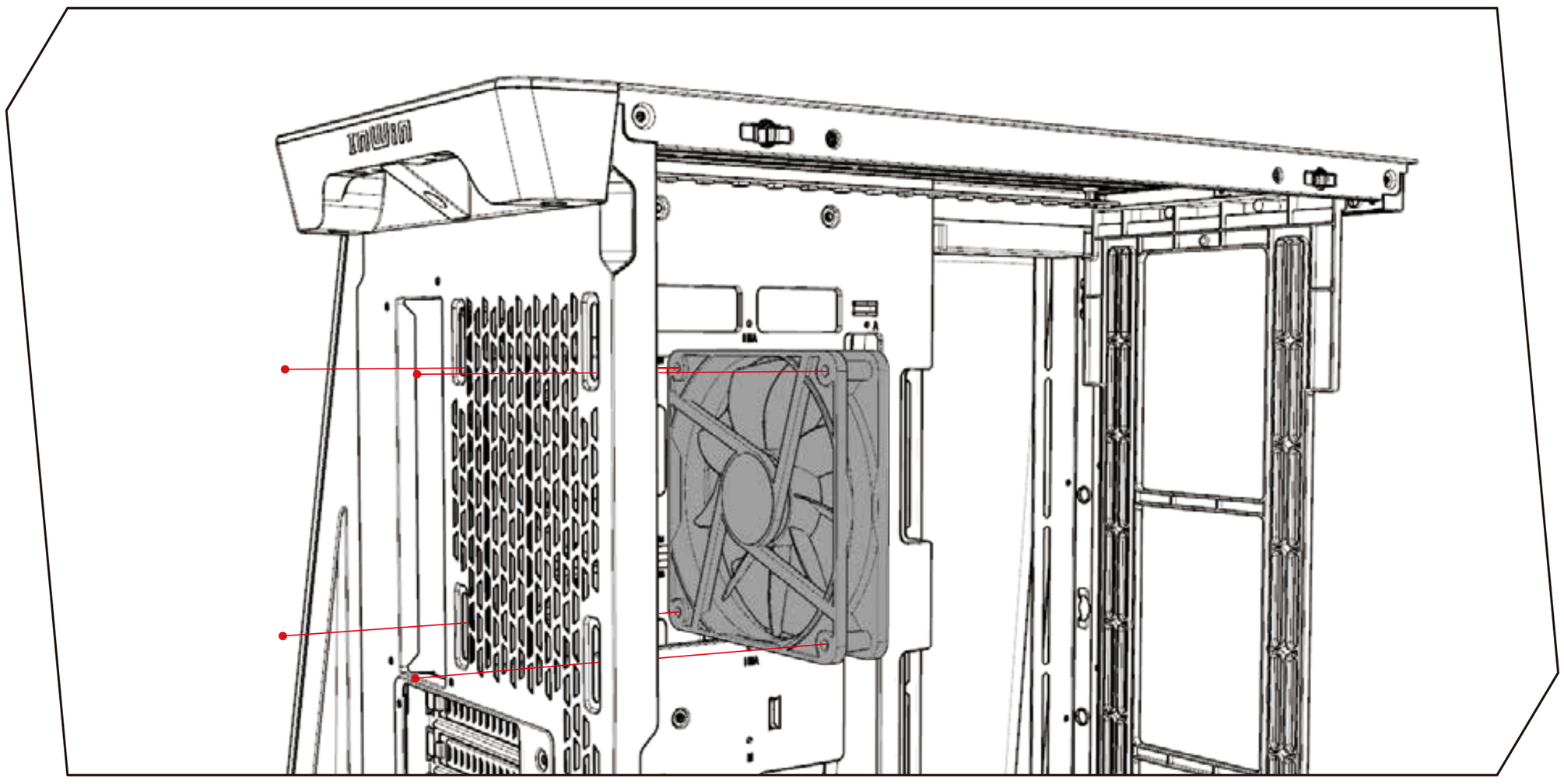

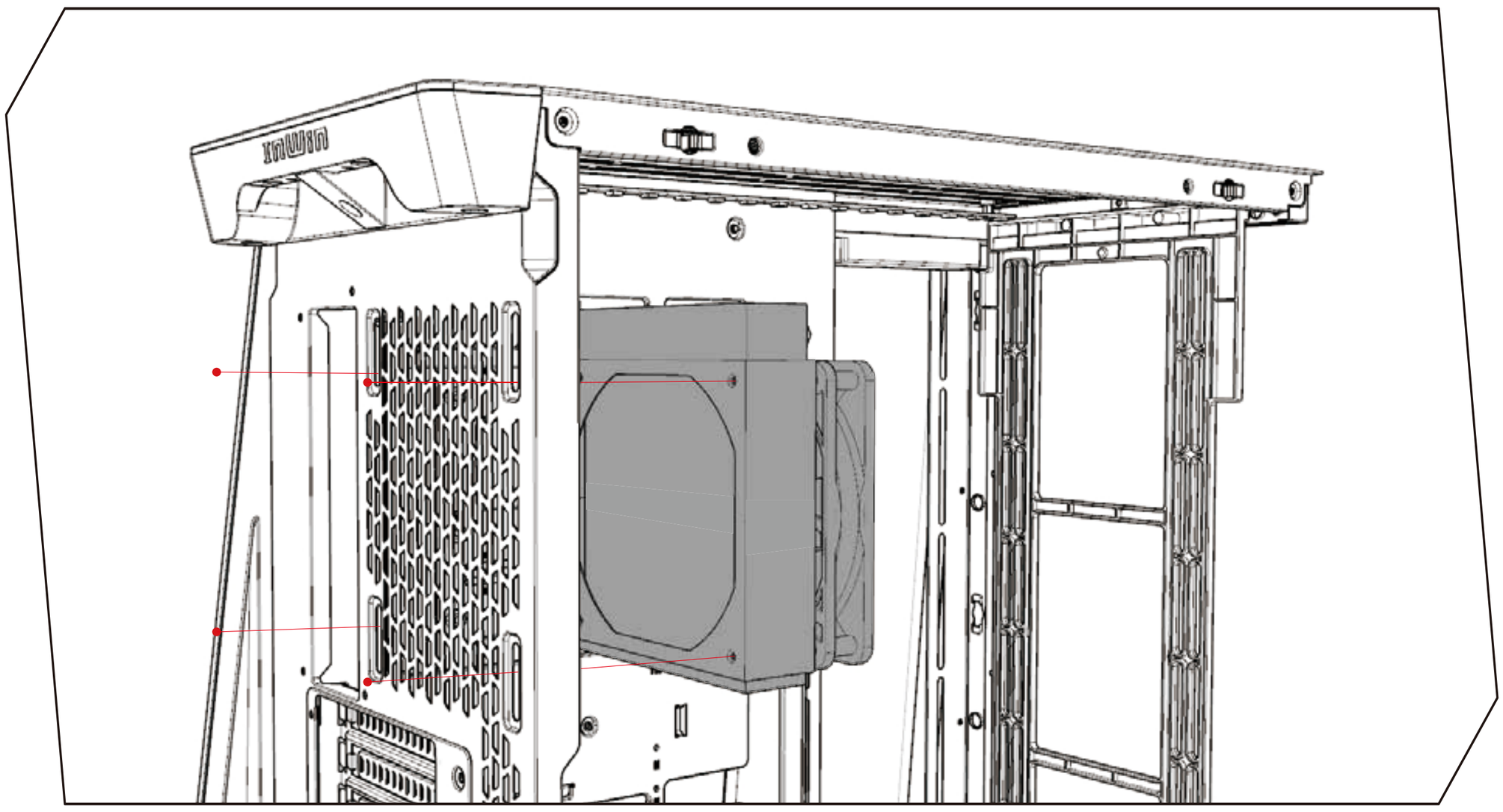

Installation Guide

ARGB Hub

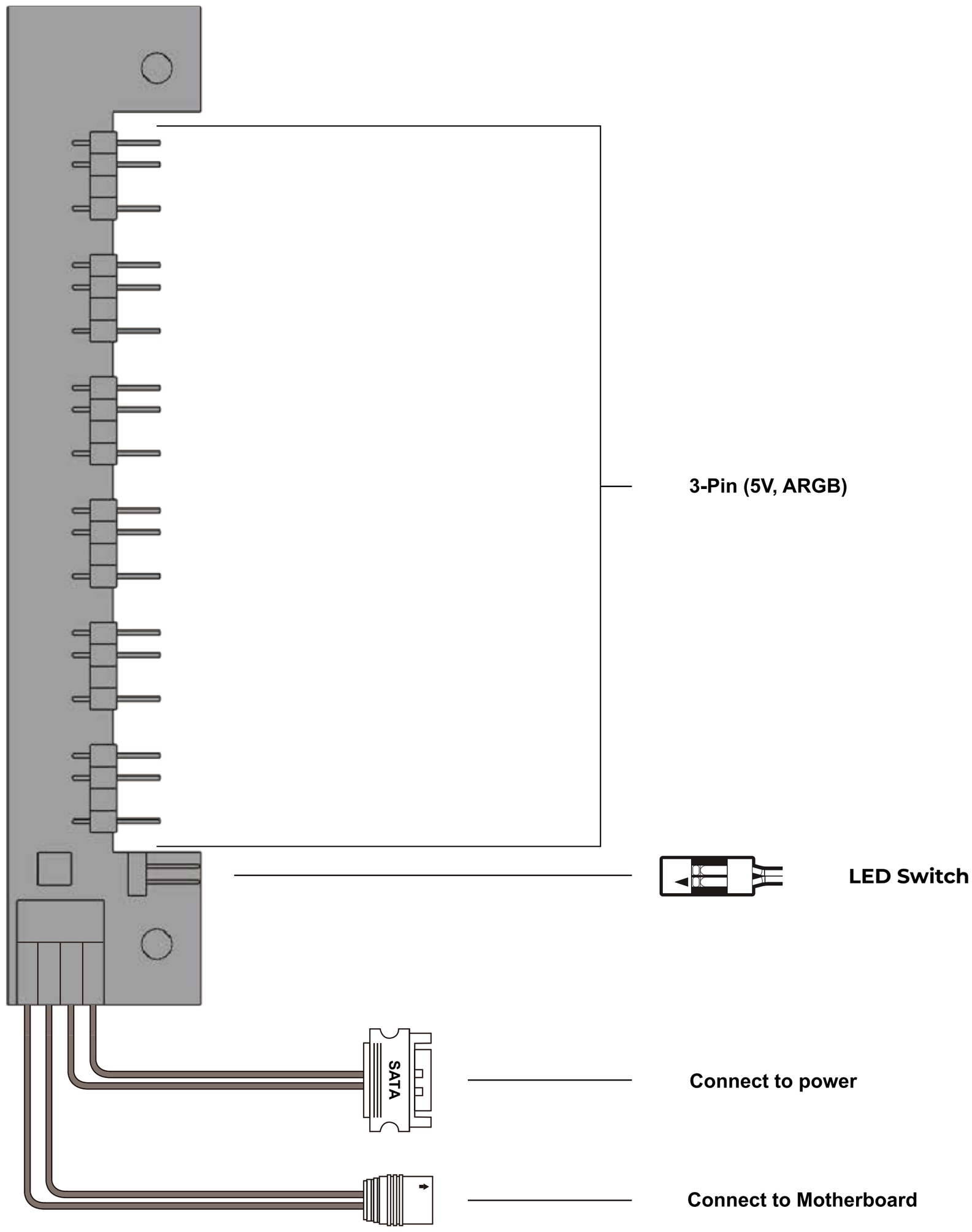

ARGB Hub Light Control Instructions

1. Modes: 19 lighting variations with power-off memory.
2. Sync: Hold for 3 seconds; white light flashes (1s) for motherboard mode.
3. Off: Hold for 6 seconds; white light flashes (2s) to turn off.

LED-Red	Rainbow Breathing
LED-Yellow	Red Breathing
LED-Green	Yellow Breathing
LED-Cyan	Cyan Breathing
LED-Blue	Green Breathing
LED-White	Blue Breathing
LED-Purple	White Breathing
Light at the end of the tunnel	Purple Breathing
Rainbow Trail	Rainbow
Full Circle	

Cable Connection

POWER SW POWER LED

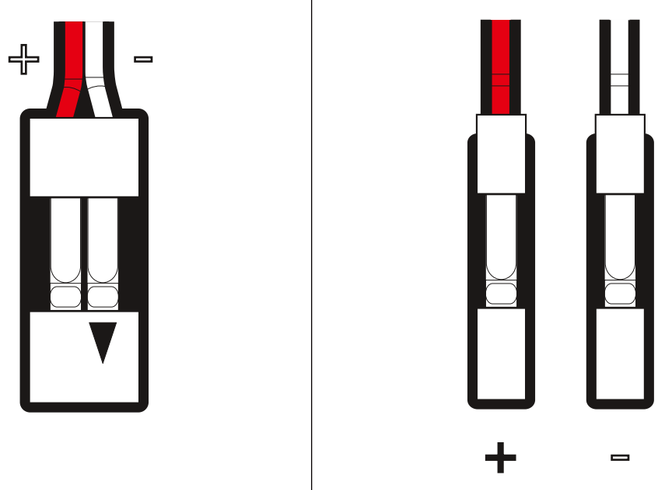

USB 3.2 Gen 2x2 Type-C

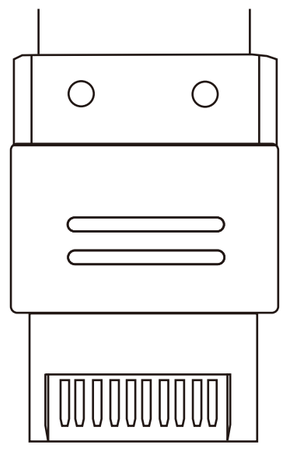

HD Audio Header

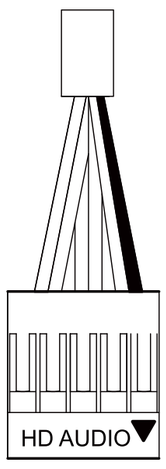

PORT2–L	BLUE	10	9	BROWN	SENSE2_R
SENSE_SEND	PURPLE	8	7		KEY
PORT2_R	YELLOW	6	5	WHITE	SNSE1_R
PORT1_R	RED	4	3	ORANGE	PRESENCE#
PORT1_L	GREEN	2	1	BLACK	GND

USB 3.2 Gen 1

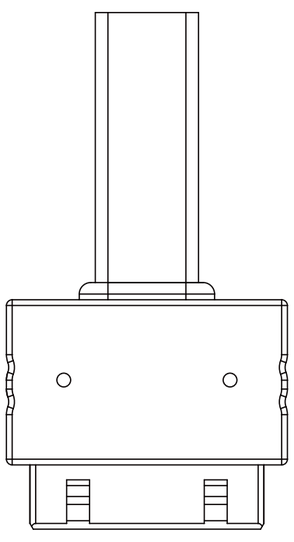

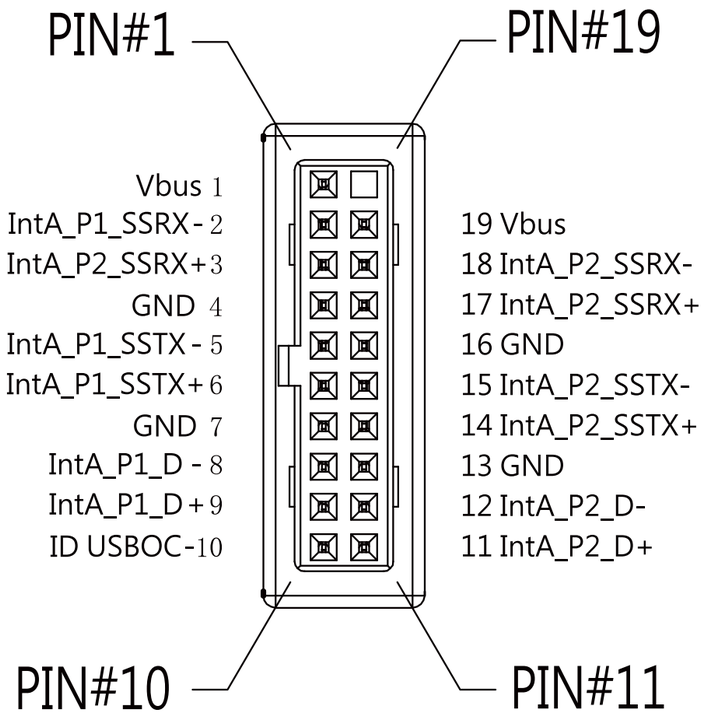

Notices and Warranty

■ Notices

1. Please follow the user manual for installation guidelines.
2. When installing computer components, please use the antistatic precautions to prevent ESD (electrostatic discharge) damage. This can cause injury to the installer and/or damage to the machine. Incorrect installation may burn yourmotherboard and other system components.
3. To avoid any damages, please do not use this product for any other purpose than its intended use.
4. Any modifications may damage the product.
5. Please remove all internal devices before shipping or moving. (Including power supply, hard drives, CD-ROM, motherboard and CPU, etc)
6. When storing the case, please keep this product away from high temperatures.Keep away from machines such as heaters that might cause hightemperatures.
7. For more technical support, please visit the InWin Forum at https://forum.in-win.com/

■ Warranty

1. For more detailed warranty information, please visit the InWin retail website at www.in-win.com
2. The actual product is subject to change without prior notice. In Win Development Inc. reserves the right to make any final modifications.

CONTEMPORARY & INNOVATIVE

www.in-win.com

Copyright © 2025 In Win Development Inc. All Rights Reserved.